$Q_{3G}1(6)1F-63RDN10\sim100$

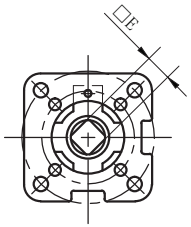

ISO 5211

SIZE	DN(mm)	A	L	L1	□E	H	H1	H2	W	ISO 5211
3/8″	10	17.1	60	70	9	63	32	7	120	F03/F04
1/2″	15	21.3	72	72	9	70	40	7	120	F03/F04
3/4″	20	26.7	80	80	9	80	50	9	120	F03/F04
1″	25	33.4	90	92	11	90	57	11	135	F04/F05
1 1/4″	32	42.2	105	105	11	95	61	11	150	F04/F05
1 1/2″	40	48.3	115	115	14	105	76	14	185	F05/F07
2″	50	60.3	130	130	14	112	84	14	185	F05/F07
2 1/2″	65	73	175	175	17	174	100	16	248	F07/F10
3″	80	88.9	190	190	17	185	111	16	248	F07/F10
4″	100	114.3	230	250	19	205	130	16.5	310	F07/F10

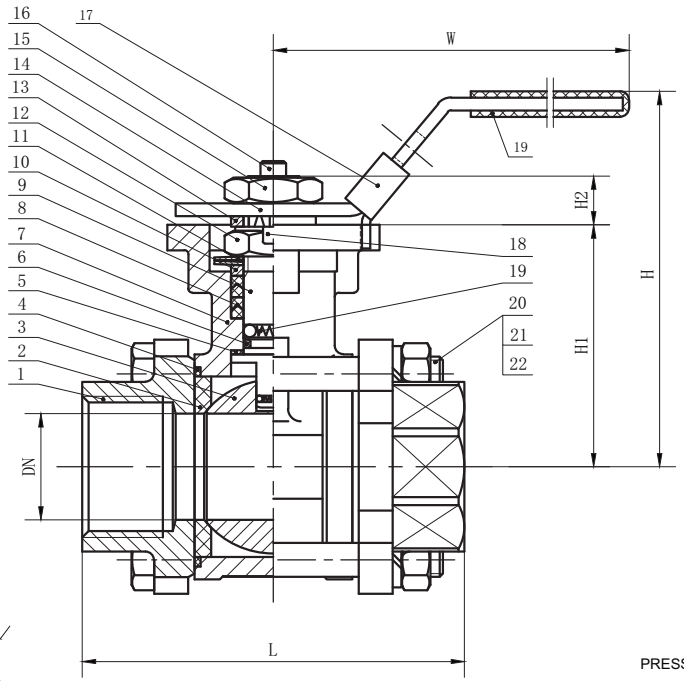

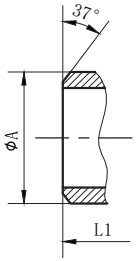

BW

No.	Parts name	Material	No.	Parts name	Material
1	Bonnet	EN10213-4 DIN1.4408	13	Packing Gland	DIN 1.4301
2	Seat	PTFE	14	Handle	DIN1.4301
3	Ball	DIN1.4401	15	Nut	DIN1.4301
4	Gasket	PTFE	16	Stop Pin	DIN1.4301
5	Stem Gasket	PTFE	17	Handle Lock	DIN1.4301
6	O-Ring	Viton	18	Pin	Plastic
7	Body	EN10213-4 DIN1.4408	19	Handle sleeve	Plastic
8	Packing	PTFE	20	Thrust Washer	DIN1.4301
9	Stem	DIN 1.4401	21	Anti-static device	DIN 1.4301
10	Packing Gland	DIN 1.4301	22	Bolt	DIN 1.4301
11	Butterfly Spring	PH15-7Mo	23	Spring Washer	DIN 1.4301
12	Stem Nut	DIN 1.4301	24	Nut	DIN 1.4301

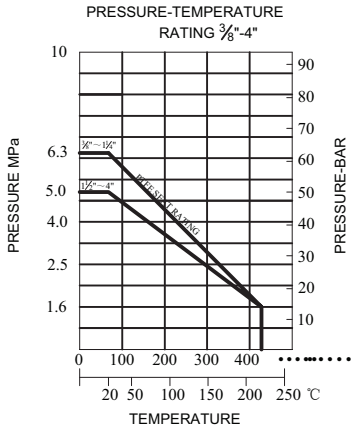

TECHNICAL SPECIFICATION

1 Basic design and manufacture according to ANSI B16.34;
2 Face-to-face dimensions complied with DIN3202;
3 NPT Threaded ends complied with ANSI B 1.20.1;
4 Rc,Rp&G Threaded ends complied with BS 21/2779, DIN 259/2999,ISO 228 are upon request;
5 Permissible Variations in Outside Diameter(A): Size:3/8″~1-1/2″(+0.4mm~-0.8mm),Size:2″~4″(±0.8mm)
6 Inspection and tested according to API598。

借(通)用件登记
描　图
描　校
旧底图总号
底图总号
签　字
日　期

标记	处数	更改文件号	签字	日期

$Q_{3G}1(6)1F-63RDN10\sim100$
3PC THREAD BALL VALVE
ASSEMBLY DIAGRAM

设计		标准化	
校对		审定	
审核		批准	
工艺		日期	

图样标记	数量	重量	比例
共　页		第　页	

3PC THREAD BALL VALVE
WITH MOUNTING PAD

$Q_{3G}1(6)1F-63RDN10\sim100$